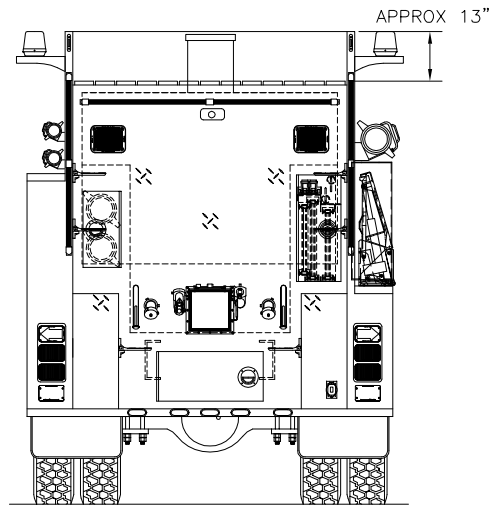

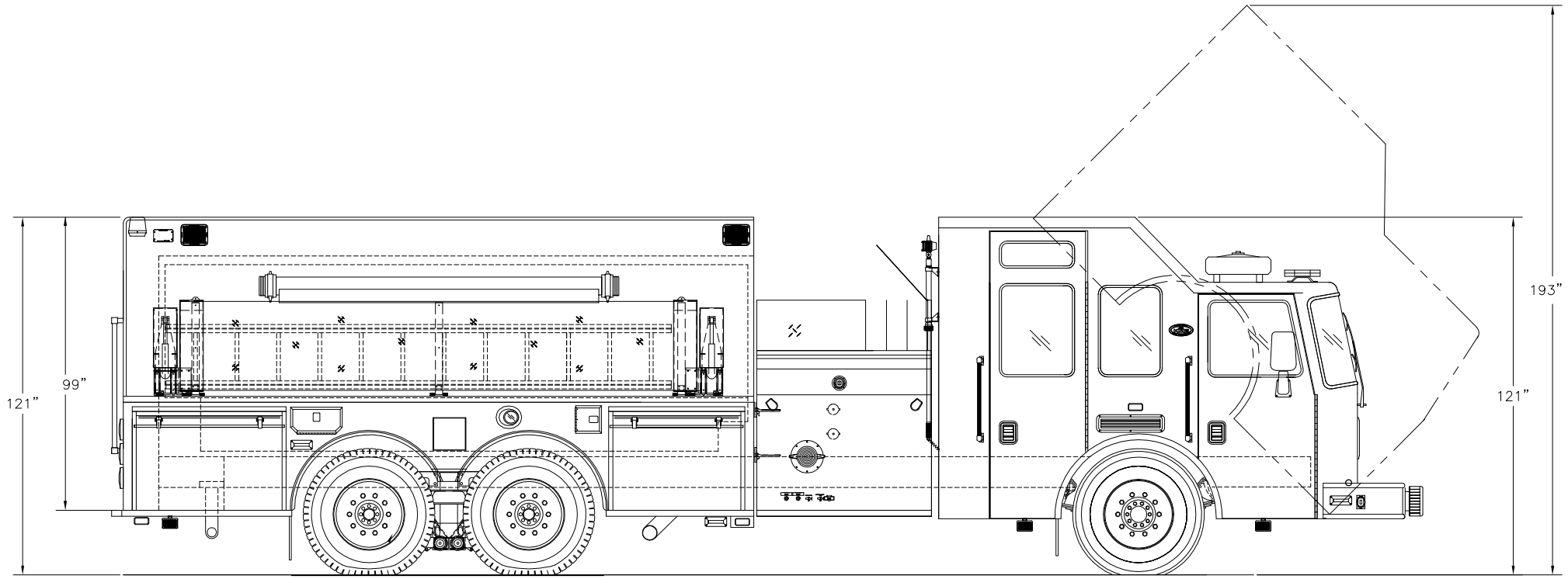

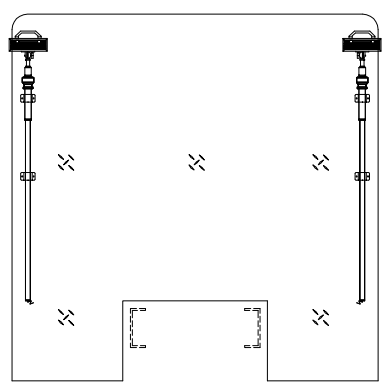

REAR VIEW OF CAB

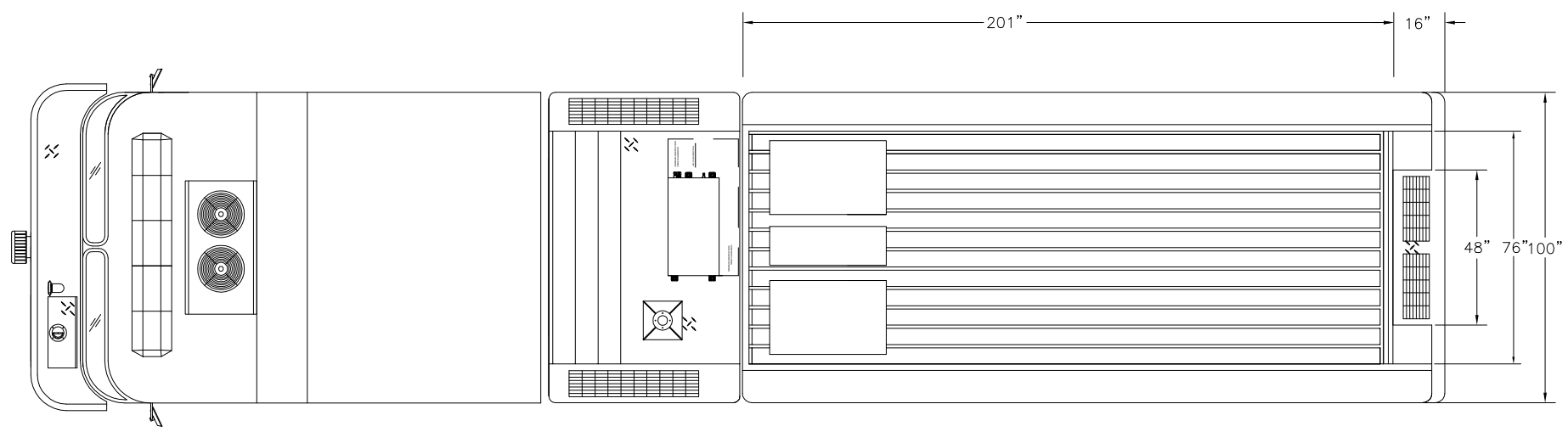

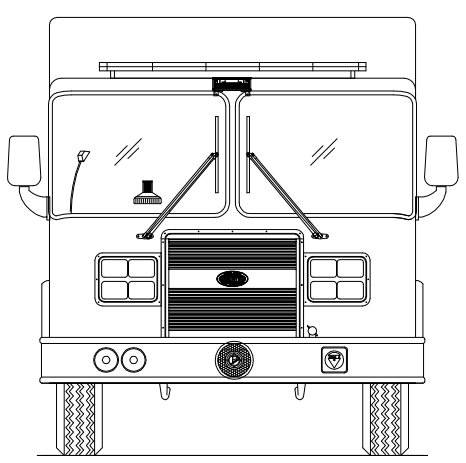

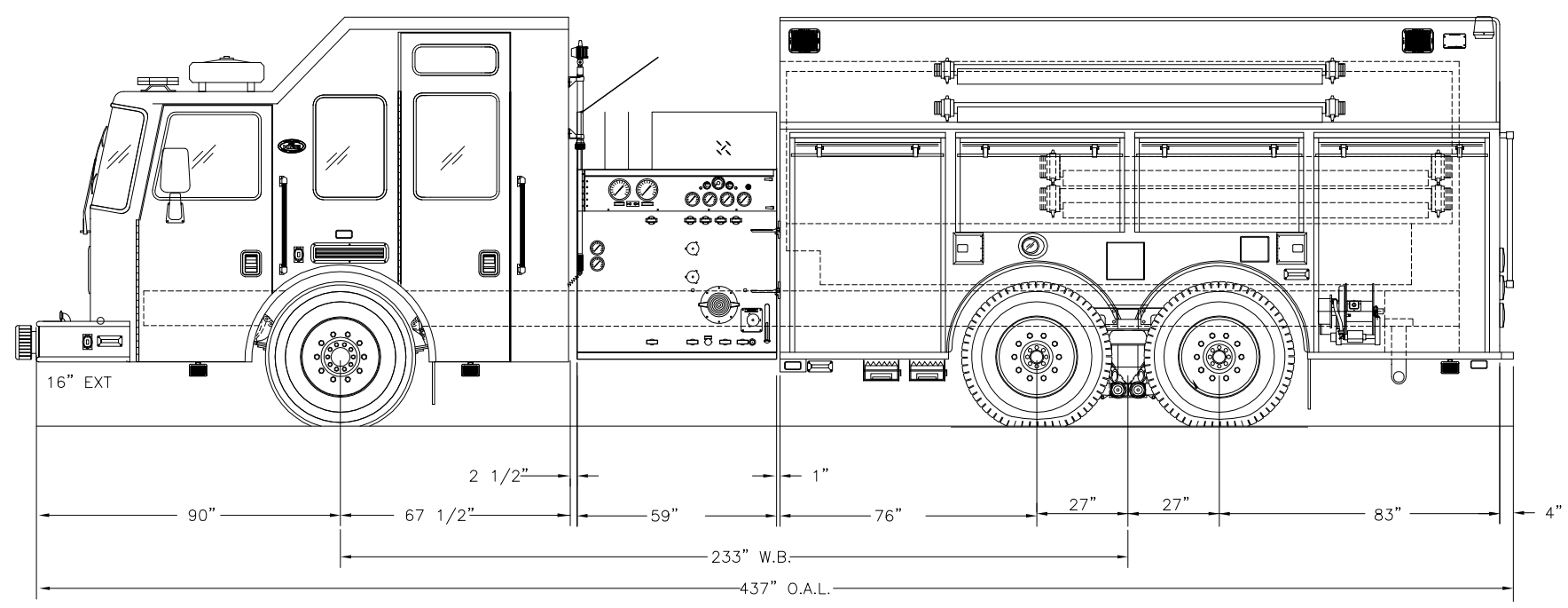

-------- CHASSIS --------

CHASSIS: KME PREDATOR LFD 22" RR
CAB: 4 DOOR
ENGINE: CAT C13 525 HP W/JAKE
TRANSMISSION: ALLISON 4000EVS
FRONT AXLE: 21,480#
REAR AXLE: 48,000#

-------- PUMP --------

PUMP: WATEROUS CSU-C10-2000 GPM SINGLE STAGE

INTAKES
DRIVER SIDE: 6" & 2 1/2"
OFFICER SIDE: 6"
FRONT:
REAR:

DISCHARGES
DRIVER SIDE: (2) 2 1/2"
OFFICER SIDE: (1) 2 1/2" & (1) 4"
FRONT: (1) 2 1/2"
REAR:
DECK GUN: (1) 3"
OTHER: (2) 1 1/2" CROSSLAYS
(1) 2 1/2" CROSSLAY

-------- TANK --------

TANK: UPF POLY IIE
WATER: 3,000
FOAM:
EXTRA FILLS: (2) 3" NST FIREMANS FRIEND
DUMPS: (3) NEWTONS

-------- BODY --------

BODY TYPE: 213" FLATBACK
MATERIAL: 3/16" ALUMINUM

COMPARTMENTATION
DRIVER SIDE: FULL HEIGHT-SPLIT DEPTH
OFFICER SIDE: LOW

HOSEBED
CAPACITY: 70 CU. FT.
DIVIDERS: N/A
HOSE LOAD:

-------- MISC. --------

GENERATOR: SMART POWER 10,000W ER
FOAM SYSTEM: ECLIPSE 200

CUSTOMER APPROVAL:

NAME:

TITLE:

DATE:

THIS DRAWING IS A GENERAL CONFIGURATION AND MAY NOT NECESSARILY REFLECT ALL CONTRACTUAL REQUIREMENTS. CONTRACT SPECIFICATIONS SHALL PREVAIL OVER DRAWING

SYM	DATE	REVISION DESCRIPTION	APP'D
A			

SALES ENGINEER : ROB MABRY

KOVATCH MOBILE EQUIPMENT
ONE INDUSTRIAL COMPLEX - NESQUEHONING, PA 18240

DIMENSIONS ARE APPROXIMATE & MAY VARY DUE TO BUILD ADJUSTMENTS

DATE	SCALE	DWG SIZE	DRAWN BY	JJM
5-16-07	1"=24"	D	APPROVED BY	RM

KME CUSTOM PUMPER

GOODVILLE FC, PA

GSO#6973